Torsion Spring

DD-10165

Not to be used for inspection purposes

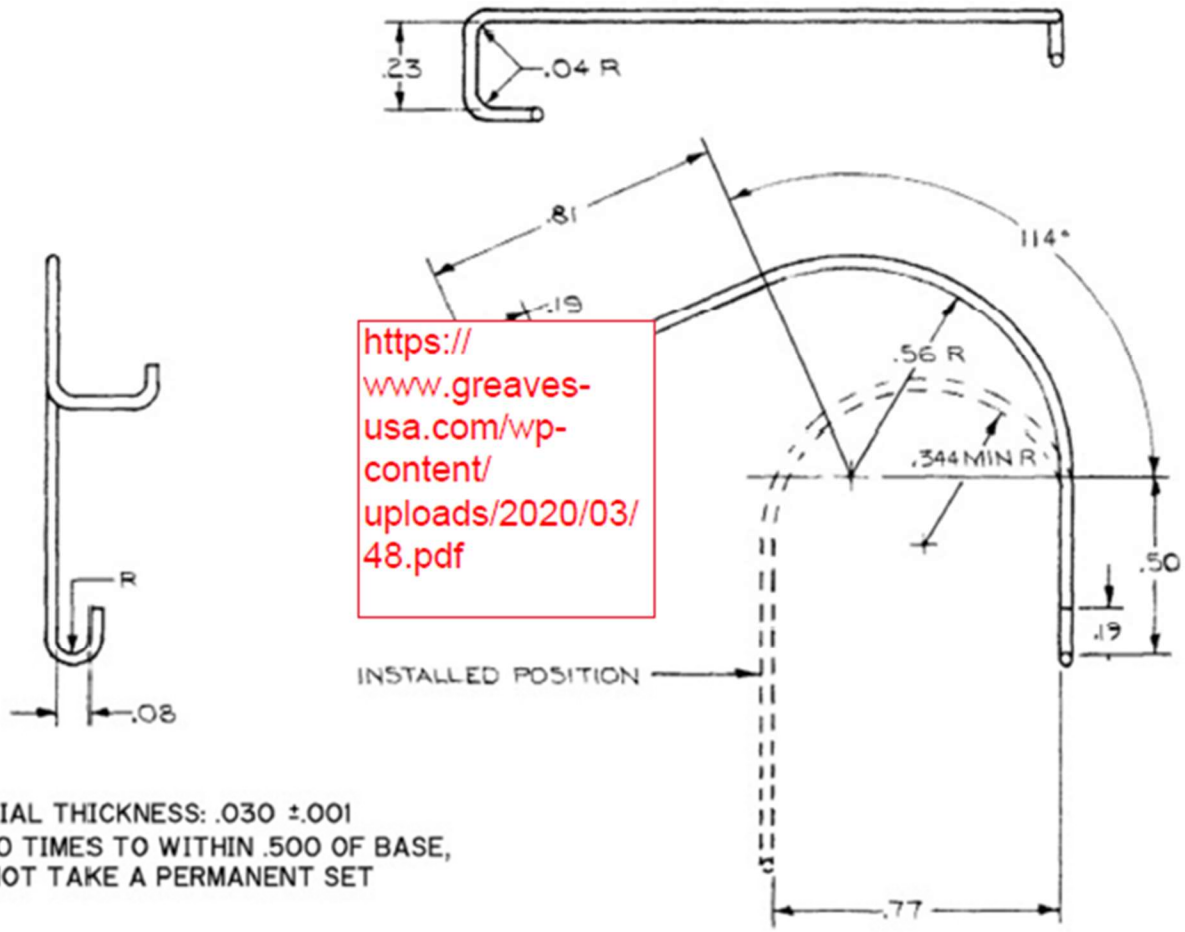

https:// www.greaves-usa.com/wp-content/ uploads/2020/03/ 48.pdf

NOTE
1 - MATERIAL THICKNESS: .030 ±.001
2 - BEND 10 TIMES TO WITHIN .500 OF BASE, MUST NOT TAKE A PERMANENT SET

302 Stainless Steel